Work Order ID 69308

Monday, May 09, 2011 7:40:13 AM

Item ID: D4370-041
Revision ID: PRELIM
Item Name: Fwd Wearplate Assembly

Accept

Setup Start
Stop

Start Date: 5/9/2011 **Start Qty:** 1.00
Required Date: 5/12/2011 **Req'd Qty:** 1.00
Reference:

Cust Item ID:
Customer:

PRELIMINARY ISSUE

Approvals: **Process Plan:** AA **Date:** 11.05.09 **Tooling:** _____ **Date:** _____
QC: _____ **Date:** _____ **SPC (Y/N):** _____ **Date:** _____

Run Start
Stop

Sequence ID/ Work Center ID	Operation Description	Set Up/ Run Hours	Tool ID	Tool #	Plan Code	Accept Qty	Reject Qty	Reject Number	Insp. Stamp
Draw Nbr	**Revision Nbr**								
D4370	PA2								
100		0.00							
Waterjet	**Memo**	0.00				B11-5-10			
FLOW CNC Waterjet	1-Cut as per Dwg (D4370-1) Dwg Rev: PA2 Prog Rev: PA2 2-Deburr if necessary							1	
110	QC2- Inspect parts off machine FAI/FAIB	0.00							
QC	**Memo**	0.00				B11-5-10			
Quality Control									

Work Order ID 69308

Monday, May 09, 2011 7:40:13 AM

Item ID: D4370-041
Revision ID: PRELIM
Item Name: Fwd Wearplate Assembly

Accept

Setup **Start**
Stop

Start Date: 5/9/2011 **Start Qty:** 1.00
Required Date: 5/12/2011 **Req'd Qty:** 1.00
Reference:

Cust Item ID:
Customer:

Run **Start**
Stop

Approvals: **Process Plan:** _____ **Date:** _____ **Tooling:** _____ **Date:** _____
QC: _____ **Date:** _____ **SPC (Y/N):** _____ **Date:** _____

Sequence ID/ Work Center ID	Operation Description	Set Up/ Run Hours	Tool ID	Tool #	Plan Code	Accept Qty	Reject Qty	Reject Number	Insp. Stamp
120 QC Quality Control	QC8- Inspect parts - second check **Memo**	0.00 - inspected to Pa2 0.00 Dwg only S ulcstio							
130 Brake NC Brake NC	Form as per dwg **Memo** *** Jigs DT8261 and DT8326.***	0.00 0.00 SB 11/05/10				1			
140 QC Quality Control	QC5- Inspect part completeness to step on W/O **Memo**	0.00 - inspected to Pa2 0.00 Dwg only S wlocling							

Work Order ID 69308

Monday, May 09, 2011 7:40:13 AM

Item ID: D4370-041
Revision ID: PRELIM
Item Name: Fwd Wearplate Assembly

Accept

Setup Start
Stop

Start Date: 5/9/2011 **Start Qty:** 1.00
Required Date: 5/12/2011 **Req'd Qty:** 1.00
Reference:

Cust Item ID:
Customer:

Run Start
Stop

Approvals: **Process Plan:** _____ **Date:** _____ **Tooling:** _____ **Date:** _____
QC: _____ **Date:** _____ **SPC (Y/N):** _____ **Date:** _____

Sequence ID/ Work Center ID	Operation Description	Set Up/ Run Hours	Tool ID	Tool #	Plan Code	Accept Qty	Reject Qty	Reject Number	Insp. Stamp
150		0.00				X1		11-06-09	JBL/iz
Large Fab	**Memo**	0.00							
Large Fab	1- on D4371-1, fill cut outs with hardcoat welding rod as per dwg D4370 **DT9756** 2059 B Hardcoat Welding Rod BATCH#: M117659 2-weld D4371-1 to wearplate by positioning holes together as per dwg D4370 304 S.S. Welding Rod BATCH #: M107059 3-Transfer drill holes in bar								
160	QC9- Inspect visual per QSI004- Fusion Welds	0.00							
QC	**Memo**	0.00							
Quality Control									

11-06-09 Tx

Work Order ID 69308

Monday, May 09, 2011 7:40:13 AM

Item ID: D4370-041
Revision ID: PRELIM
Item Name: Fwd Wearplate Assembly

Accept

Setup Start
Stop

Start Date: 5/9/2011 **Start Qty:** 1.00
Required Date: 5/12/2011 **Req'd Qty:** 1.00
Reference:

Cust Item ID:
Customer:

Run Start
Stop

Approvals: **Process Plan:** _____ **Date:** _____ **Tooling:** _____ **Date:** _____
QC: _____ **Date:** _____ **SPC (Y/N):** _____ **Date:** _____

Sequence ID/ Work Center ID	Operation Description	Set Up/ Run Hours	Tool ID	Tool #	Plan Code	Accept Qty	Reject Qty	Reject Number	Insp. Stamp
170	QC5- Inspect part completeness to step on W/O	0.00							
QC	Memo	0.00							
Quality Control									
180		0.00							
Small Fab	Memo	0.00							
Small Fab	1- After finish, coat entire top (concave) surface as per note 10 on sheet 2 dwg D4370.								
190	QC5- Inspect part completeness to step on W/O	0.00							
QC	Memo	0.00							
Quality Control									

170 — inspection to PA2 Dwg only & w/o log (EO)

180 — coat inside surface using Plus 1 Rockguard 4715 Black — 11.06.13

ET 11-06-13

190 — 11 06 13 (1)

Work Order ID 69308

Monday, May 09, 2011 7:40:14 AM

Item ID: D4370-041
Revision ID: PRELIM
Item Name: Fwd Wearplate Assembly

Accept

Setup **Start**
Stop

Start Date: 5/9/2011 **Start Qty:** 1.00
Required Date: 5/12/2011 **Req'd Qty:** 1.00
Reference:

Cust Item ID:
Customer:

Run **Start**
Stop

Approvals: **Process Plan:** _____ **Date:** _____ **Tooling:** _____ **Date:** _____
QC: _____ **Date:** _____ **SPC (Y/N):** _____ **Date:** _____

Sequence ID/ Work Center ID	Operation Description	Set Up/ Run Hours	Tool ID	Tool #	Plan Code	Accept Qty	Reject Qty	Reject Number	Insp. Stamp
200	Identify as per dwg & Stock Location:_____	0.00							
Packaging	**Memo**	0.00				_____	_____	_____	_____
Packaging									
210	QC21- Final Inspection - Work Order Release	0.00							
QC	**Memo**	0.00				_____	_____	_____	_____
Quality Control									

RO2382

POSITIVE RECALL
EFFECTIVE_____ **AUTH** _____
RELEASED _____ **DATE** _____

Picklist Print

Monday, May 09, 2011 7:40:10 AM

Work Order ID: 69308

Parent Item: D4370-041

Parent Item Name: Fwd Wearplate Assembly

Start Date: 5/9/2011 **Required Date:** 5/12/2011

Start Qty: 1.00 **Required Qty:** 1.00

Comments: IPP Rev:A 11.04.12 new issue DD verf:EC

Component Item ID/ Item Name	Replacement Item ID	Mfg/ Purch	Bin Item	Primary Location	Last Location	Route Seq ID	Unit of Measure	Qty on Hand	Qty per Kit	Total Qty	Qty Issued	Date Issued	Status
D4371-1		Manufactured	No			150	Each	1.0000	1	1	11/06/08	JBL	
Bar													
				Location		**Loc Qty**		**Loc Code**					
				WA		1							
				68409		1				X1			
M304S18GA		Purchased	No			100	sf	122.5000	1.914	2.014737			
304/316 .050 Sheet											B11-5-10		
				Location		**Loc Qty**		**Loc Code**					
				MAT020		122.5							
					112178	4							
					113062	18							
					116135	26				116135			
					116604	5.5							
					116979	69							

1

DART AEROSPACE LTD	Work Order:	69308
Description: FWD WEAR PLATE ASSEMBLY	Part Number:	D4370-041
Inspection Dwg: D4370-1 , Rev: pR2		Page 1 of 1

FIRST ARTICLE INSPECTION CHECKLIST

[X] First Article [X] Prototype

Drawing Dimension	Tolerance	Actual Dimension	Accept	Reject	Method of Inspection	Comments
Ø .188	+.005 - .001	.190	✓		V 1B02	
.400	+/- .010	.401	✓		V	
.050	+/- .010	.050	✓		V	
.125	+/- .010	.128	✓		V	
.875	+/- .010	.875	✓		V	
.56	+/- .030	.560	✓		V	
.80	+/- .030	.80	✓		V	
3.00	+/- .030	3.009	✓		V	
5.377	+/- .010	5.375	✓		V	
4.00	+/- .030	3.998	✓		V	
7.00	+/- .030	7.005	✓		V	
27.000	+/- .010	27.000	✓		T 1B01	
12.500	+/- .010	12.500	✓		T	
32.774	+/- .010	32.774	✓		T	
44.774	+/- .010	44.774	✓		T	
45.95	+/- .030	45.95	✓		T	
.050	+/- .010	.047	✓		V	

Measured by:	IB	Audited by:	S	Prototype Approval:	
Date:	11-5-10	Date:	11/05/10	Date:	

to PA2 Dept only

Rev	Date	Change	Revised by	Approved
A		New Issue	KJ/JLM	

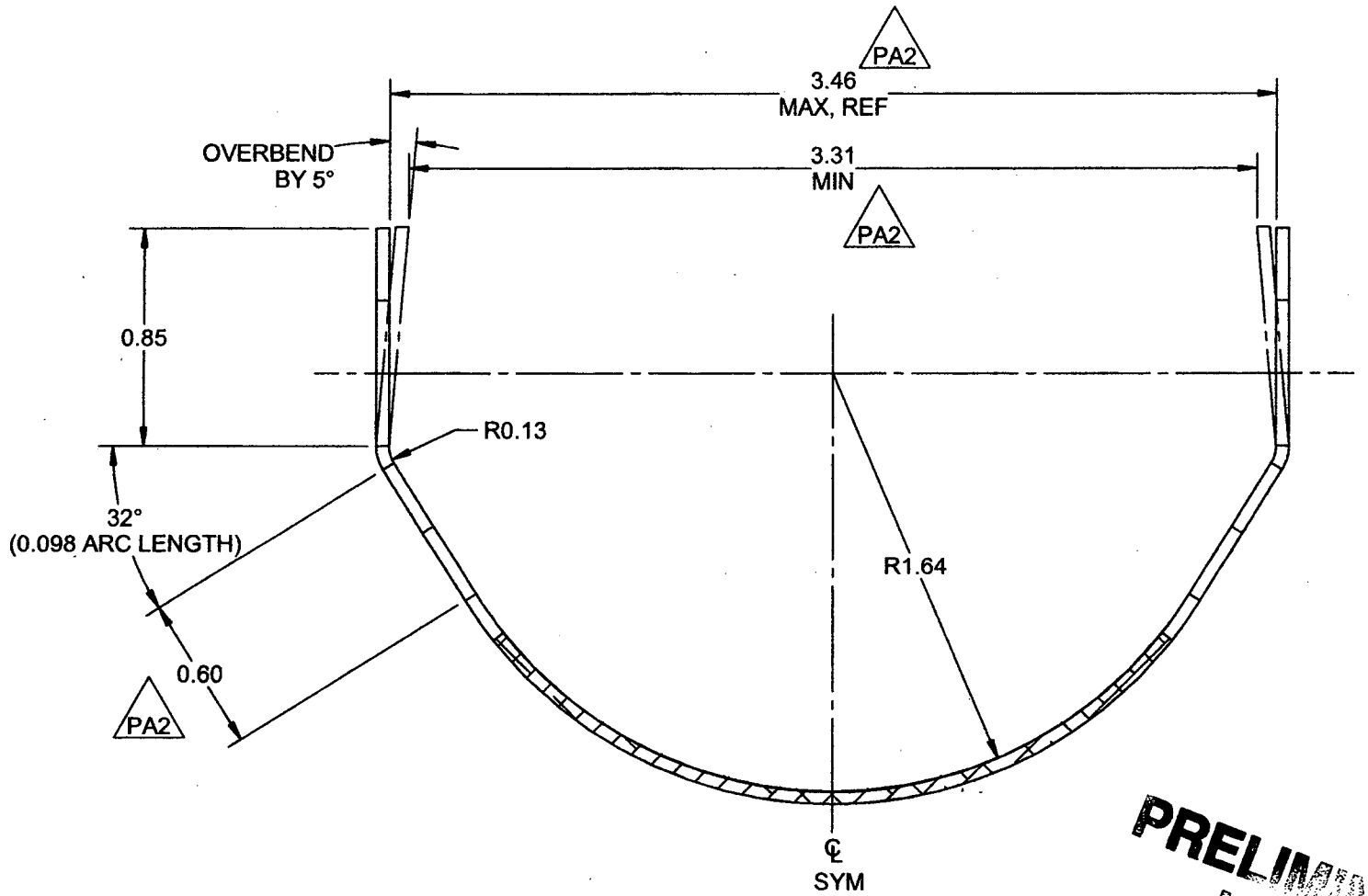

SECTION C-C

D3-3
D7-4

PRELIMINARY ISSUE

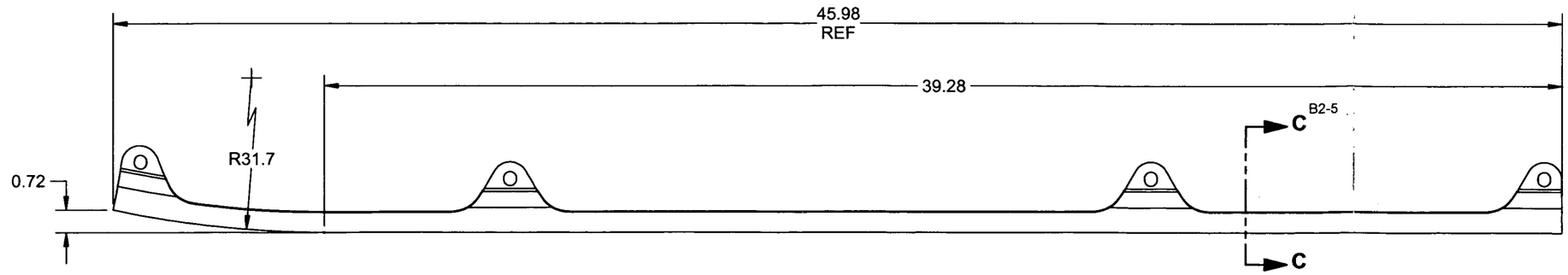

D4370-1 PLATE
(MAKE FROM D4370-1F)

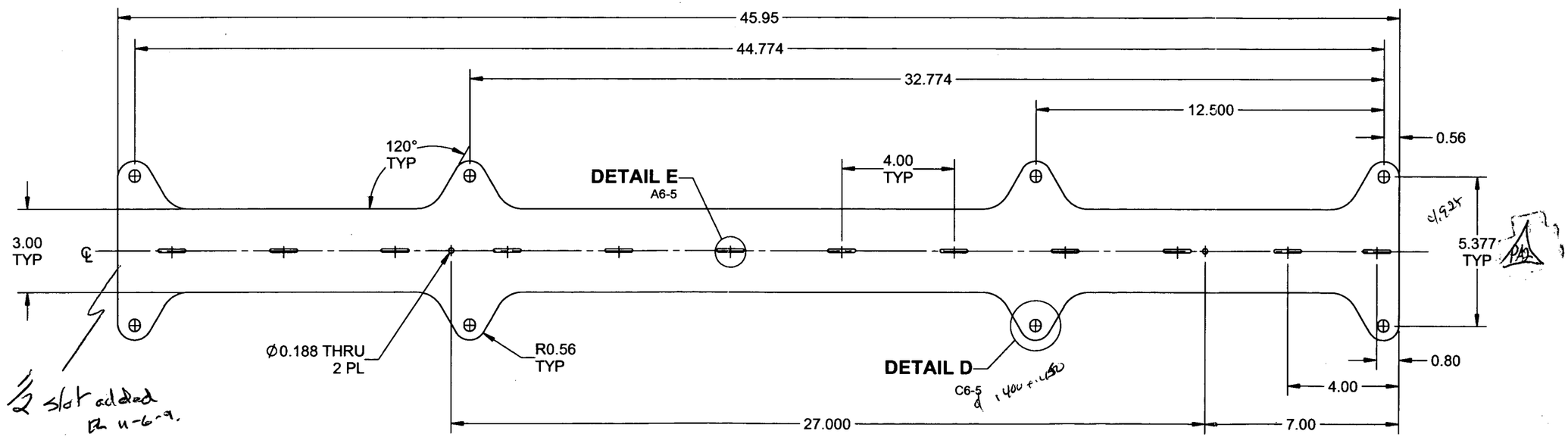

D4370-1F PLATE

PRELIMINARY ISSUE

NOTES:
1) MATERIAL: AISI 304/316 STAINLESS STEEL SHEET PER AMS 5513 OR 5524
OR ASTM A240 OR ASME SA240
18 GAUGE (0.050 THICK), REF. DART SPEC. M304S18GA
2) FINISH: NONE
3) TOLERANCES: PER DART QSI 018 UNLESS OTHERWISE NOTED
4) UNITS: INCHES UNLESS OTHERWISE NOTED
5) BREAK SHARP EDGES: 0.005 TO 0.010 MAX
6) IDENTIFICATION: N/A
7) WEIGHT: 2.24 lbs

DESIGN	SC	DART AEROSPACE USA, INC. PORT HADLOCK, WA
DRAWN	SC	
CHECKED		DRAWING NO. D4370 — REV. PA2 — SHEET 3 OF 5
MFG. APPR.		
APPROVED		TITLE WEARPLATE ASSY — SCALE NTS
DE APPR.		
DATE	11.03.24	